Oxford Cambridge and RSA

Friday 13 June 2025 – Morning

GCSE (9–1) Combined Science A (Gateway Science)

J250/10 Chemistry (Higher Tier)

Time allowed: 1 hour 10 minutes

H

You must have:
- a ruler (cm/mm)
- the Data Sheet for GCSE (9–1) Combined Science A (Chemistry) (inside this document)

You can use:
- a scientific or graphical calculator
- an HB pencil

Please write clearly in black ink. **Do not write in the barcodes.**

Centre number | | | | | | Candidate number | | | | |

First name(s) _____

Last name _____

INSTRUCTIONS
- Use black ink. You can use an HB pencil, but only for graphs and diagrams.
- Write your answer to each question in the space provided. If you need extra space use the lined pages at the end of this booklet. The question numbers must be clearly shown.
- Answer **all** the questions.
- Where appropriate, your answer should be supported with working. Marks might be given for using a correct method, even if your answer is wrong.

INFORMATION
- The total mark for this paper is **60**.
- The marks for each question are shown in brackets **[ ]**.
- Quality of extended response will be assessed in questions marked with an asterisk (*).
- This document has **24** pages.

ADVICE
- Read each question carefully before you start your answer.

© OCR 2025 [601/8687/2]
DC (WW/CB) 351886/4
OCR is an exempt Charity

Section A

You should spend a **maximum** of **20 minutes** on this section.

Write your answer to each question in the box provided.

1 The equation shows a reaction that has reached **dynamic equilibrium**.

$N_2(g) + 3H_2(g) \rightleftharpoons 2NH_3(g)$

Which statement explains why this reaction is a dynamic equilibrium?

A N_2 and H_2 are gases.

B The rates of the forward and reverse reactions are equal.

C The reaction has stopped.

D The reaction produces a 100% yield of NH_3.

Your answer ☐ **[1]**

© OCR 2025

2 The graph shows the volume of gas produced during a reaction.

A tangent has been drawn at 50 seconds. The gradient of the tangent gives the rate of reaction.

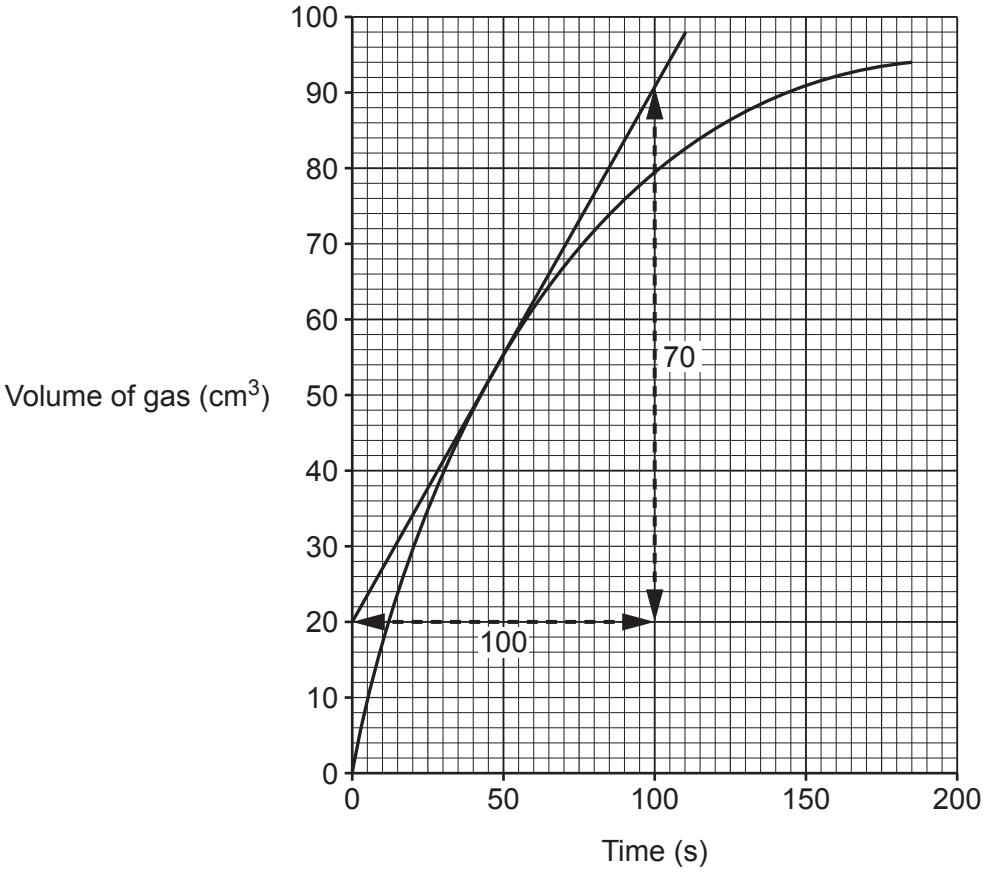

What is the rate of reaction, in cm^3/s, at 50 seconds?

A 0.56

B 0.70

C 1.1

D 1.4

Your answer ☐ **[1]**

© OCR 2025

3 What are the optimum reaction conditions for the cracking of hydrocarbons?

	Temperature (°C)	Catalyst
A	25	not used
B	25	alumina
C	650	alumina
D	650	not used

Your answer ☐ **[1]**

4 Why do reactions happen faster at higher temperatures?

A The activation energy increases.

B The particles are closer together.

C The particles collide with more energy.

D The size of the particles increases.

Your answer ☐ **[1]**

© OCR 2025

5 The diagram shows information about a fraction produced in the fractional distillation of crude oil.

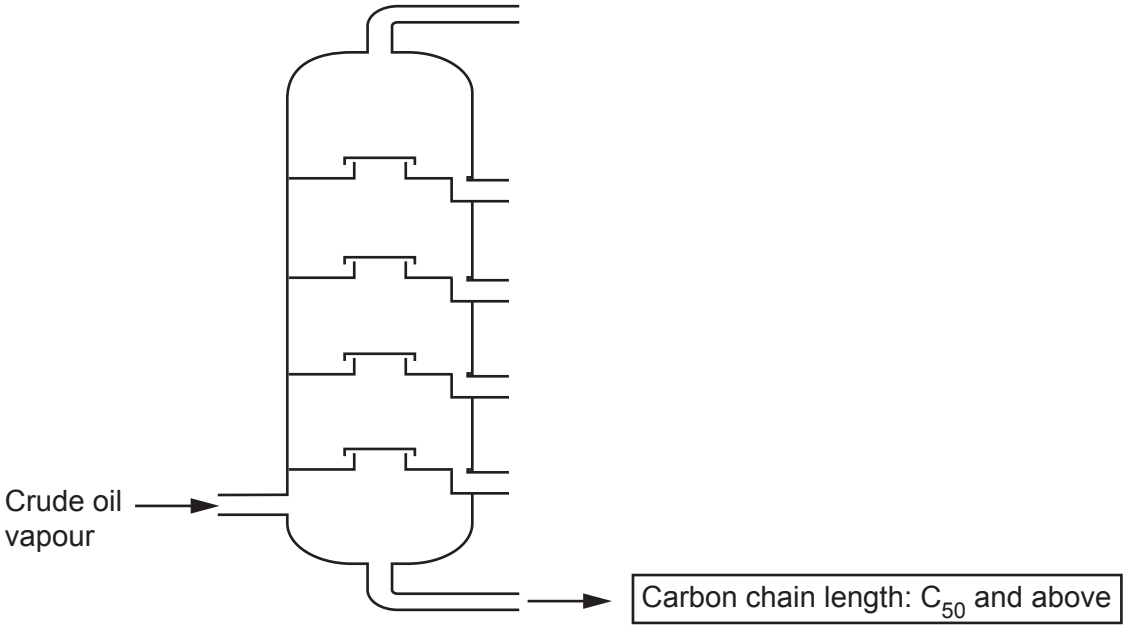

What is a correct statement about the fraction produced at the bottom of the fractional distillation column?

A It has a high boiling point.

B It is a gas.

C Its intermolecular forces are weak.

D Its molecules are small.

Your answer ☐ **[1]**

© OCR 2025

6 These are the first four members of the alkane homologous series.

Methane	CH_4
Ethane	CH_3CH_3
Propane	$CH_3CH_2CH_3$
Butane	$CH_3CH_2CH_2CH_3$

Which statement describes the alkanes in the homologous series?

A The formula of successive alkanes differs by CH_3.

B They have different chemical properties.

C They have the same boiling points.

D They have the same general formula.

Your answer ☐ **[1]**

7 The steps in **phytoextraction** are listed but in the incorrect order.

1 Plants absorb metal ions through their roots.
2 Plants are burnt.
3 Plants are grown in soil containing a low-grade ore.
4 Plants are harvested.
5 The metal is extracted.

What is the **correct** order of these steps?

A $3 \rightarrow 1 \rightarrow 2 \rightarrow 4 \rightarrow 5$

B $3 \rightarrow 1 \rightarrow 4 \rightarrow 2 \rightarrow 5$

C $3 \rightarrow 2 \rightarrow 4 \rightarrow 1 \rightarrow 5$

D $3 \rightarrow 4 \rightarrow 1 \rightarrow 2 \rightarrow 5$

Your answer ☐ **[1]**

© OCR 2025

8 The Earth's early atmosphere may have been mainly carbon dioxide.

Which statement about the carbon dioxide is **incorrect**?

A It dissolved in the oceans.

B It reacted with nitrogen.

C It was absorbed by plants during photosynthesis.

D It was released by volcanoes.

Your answer ☐ **[1]**

9 Which equation shows a reaction where copper is extracted using electrolysis?

A $CuCO_3(s) \rightarrow CuO(s) + CO_2(g)$

B $CuCl_2(aq) \rightarrow Cu(s) + Cl_2(g)$

C $2CuO(s) + C(s) \rightarrow 2Cu(s) + CO_2(g)$

D $Cu_2S(s) + O_2(g) \rightarrow 2Cu(s) + SO_2(g)$

Your answer ☐ **[1]**

10 Which statement explains why zinc, Zn, is **more** reactive than iron, Fe?

A Fe atoms form negative ions more easily than Zn atoms.

B Fe atoms lose electrons more easily than Zn atoms.

C Zn atoms form positive ions more easily than Fe atoms.

D Zn atoms gain electrons more easily than Fe atoms.

Your answer ☐ **[1]**

© OCR 2025

Section B

11 Hydrogen peroxide solution, $H_2O_2(aq)$, decomposes to make water and oxygen gas.

(a) Complete the **balanced symbol** equation for the reaction.

$$2H_2O_2(aq) \rightarrow \text{.....}H_2O(l) + \text{.....}(g)$$

[2]

(b) Describe a test and its result which shows that the gas produced in the reaction is oxygen.

Test .....

.....

Result .....

.....

[2]

(c) A hydrogen peroxide solution produces oxygen gas slowly.

A student adds a piece of potato to the hydrogen peroxide solution.
The potato contains a biological catalyst.

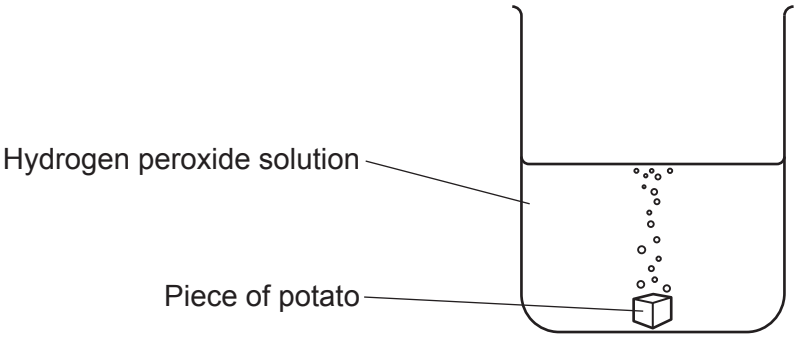

(i) What name is given to biological catalysts?

..... **[1]**

(ii) Describe and explain the effect of adding the piece of potato to the hydrogen peroxide solution.

Include ideas about rate of reaction and activation energy.

.....

.....

.....

..... **[2]**

© OCR 2025

(iii) The student measures the total volume of oxygen produced in the reaction with and without the piece of potato.

With the potato, the total volume is: increased, decreased, stays the same.

Tick (✓) **one** box.

It is decreased. ☐

It is increased. ☐

It stays the same. ☐

[1]

(d) The piece of potato added to the hydrogen peroxide solution is a six-sided cube.

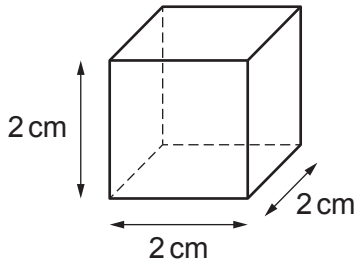

(i) Calculate the surface area of the piece of potato in cm^2.

Surface area of the piece of potato = ... cm^2 **[2]**

(ii) A student thinks that cutting the potato into smaller pieces will make the catalyst more effective.

Explain why the student is **correct**.

Tick (✓) **one** box.

The smaller pieces have a larger mass. ☐

The smaller pieces have a larger surface area. ☐

The smaller pieces have a larger volume. ☐

[1]

© OCR 2025

(e) The student measures the rate of reaction when the piece of potato is added to the hydrogen peroxide.

The rate of reaction is $1.5\,cm^3/s$.

They then measure the rate of reaction again with an increased concentration of hydrogen peroxide.

What would the rate of reaction be now?

Tick (✓) **one** box.

Rate of reaction = $1.5\,cm^3/s$ ☐

Rate of reaction > $1.5\,cm^3/s$ ☐

Rate of reaction < $1.5\,cm^3/s$ ☐

[1]

© OCR 2025

BLANK PAGE

DO NOT WRITE ON THIS PAGE

© OCR 2025

12 Alkanes are an important group of hydrocarbons. They are used as fuels as they release large amounts of energy as they burn.

(a) The table shows how the energy released for different alkanes changes with the number of carbon atoms in a molecule.

Alkane	**Number of carbon atoms in a molecule**	**Energy released (kJ / mol)**
Methane	1	900
Ethane	2	1600
Propane	3	
Butane	4	2900
Pentane	5	3500

(i) Plot the data from the table on the graph.

Include a scale for the *y* axis. **[3]**

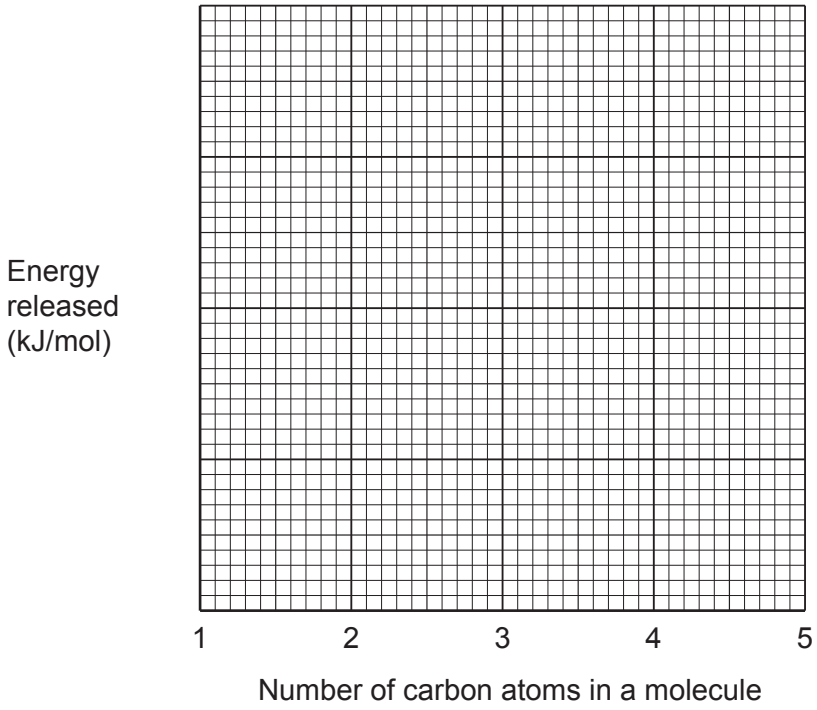

(ii) Draw a line of best fit. **[1]**

(iii) Use your graph to estimate the energy released when propane burns.

Energy released when propane burns = ... kJ / mol **[1]**

© OCR 2025

(b) When methane, CH_4, burns it can produce carbon monoxide, CO, or carbon dioxide, CO_2.

(i) State **two** problems caused by the products of burning methane.

1 .....

.....

2 .....

.....

[2]

(ii) Suggest why methane sometimes produces carbon monoxide, CO, instead of carbon dioxide, CO_2.

.....

.....

.....

..... **[2]**

© OCR 2025

13 Chlorine is an element found in Group 7 of the Periodic Table.

(a) What are the elements in Group 7 called?

Tick (✓) **one** box.

The alkali metals ☐

The halogens ☐

The noble gases ☐

[1]

(b) Why is chlorine found in Group 7 of the Periodic Table?

Use ideas about electron arrangement.

..... **[1]**

(c) The diagram shows the reaction between a small piece of hot sodium and chlorine gas.

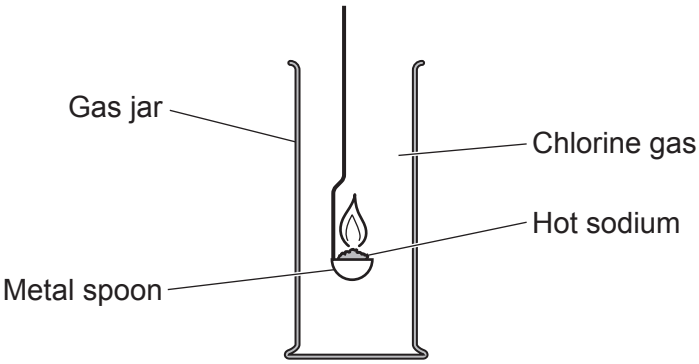

The sodium burns with a bright yellow flame and a white solid is produced.

(i) What is the **name** of the white solid made in the reaction?

..... **[1]**

(ii) A student thinks that the experiment is unsafe.

How could the experiment be improved to make it safe?

..... **[1]**

(iii) The metal spoon is made from an alloy of copper.

Suggest a property of this alloy which makes it suitable to use in the experiment.

..... **[1]**

© OCR 2025

(d) The Group 7 elements can be placed into an order of reactivity by using displacement reactions.

The table shows the results of mixing three Group 7 elements, **X**, **Y** and **Z**, and solutions of their salts.

Key	✓ = reaction	✗ = no reaction

	Salt (aq)		
Element	**KCl(aq)**	**KBr(aq)**	**KI(aq)**
X	✗	✗	✓
Y	✗	✗	✗
Z	✗	✓	✓

(i) Describe how the reactivity of the Group 7 elements changes going down the group.

Use the Periodic Table.

..... **[1]**

(ii) Which of the elements **X**, **Y** or **Z** is chlorine?

..... **[1]**

(iii) Which statements about the reactivity of the Group 7 elements are **true**, and which are **false**?

Tick (✓) **one** box in each row.

The reactivity of the Group 7 elements increases as...	**True**	**False**
...their atoms have more electron shells.		
...their atoms gain electrons more easily.		
...the number of protons in the nucleus increases.		

[2]

© OCR 2025

(e) This diagram shows how water is treated so it is safe to drink.

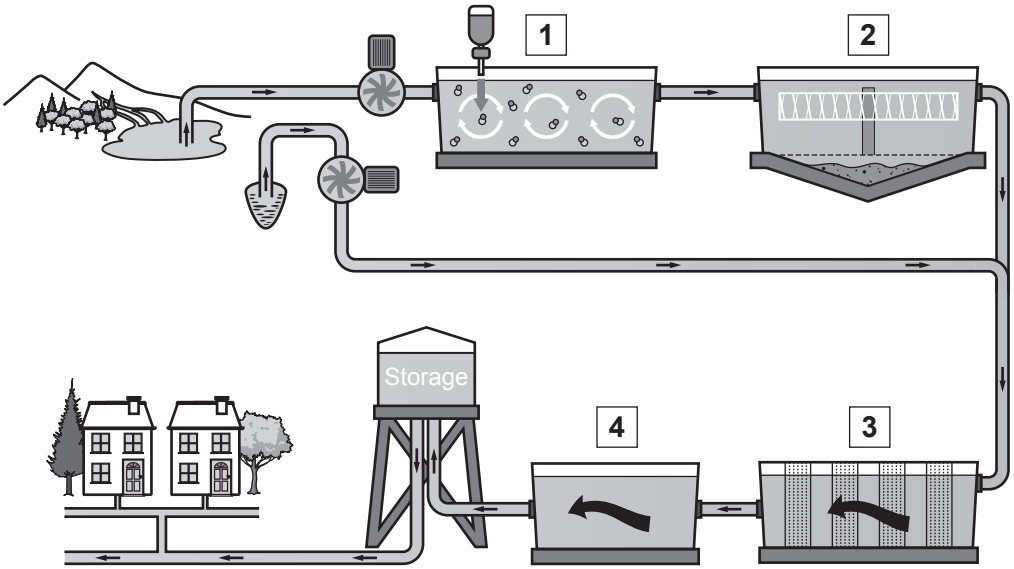

(i) At which stage, **1–4**, is chlorine added to water?

..... **[1]**

(ii) Why is chlorine added to water?

..... **[1]**

© OCR 2025

14* Hydrogen is an important chemical used in industry.

Hydrogen is produced when methane and steam are left to reach a dynamic equilibrium.

$CH_4(g) + H_2O(g) \rightleftharpoons CO(g) + 3H_2(g)$

The forward reaction is endothermic.

Describe and explain how changing **one** reaction condition can produce as much hydrogen as possible.

State and use Le Chatelier's principle.

.....

.....

.....

.....

.....

.....

.....

.....

.....

.....

.....

..... **[6]**

© OCR 2025

15 Aluminium cans are made from aluminium extracted from aluminium ore or from recycled aluminium.

(a) It takes 300 MJ of energy to produce 1.0 kg of aluminium from aluminium ore.

It needs 96% less energy to produce aluminium cans from recycled aluminium.

One aluminium can has a mass of 15 g.

Calculate how much energy, in MJ, it takes to produce **one** aluminium can from recycled aluminium.

Energy to produce one aluminium can = ... MJ **[4]**

(b) The picture shows recycling bins in a school.

(i) Evaluate the role of these recycling bins in supporting the recycling of materials such as aluminium cans.

Include both a positive and a negative factor in your answer.

Positive factor .....

.....

Negative factor .....

.....

[2]

© OCR 2025

(ii) The aluminium cans which are collected are transported to a recycling plant.

Outline how these aluminium cans are processed ready to be made into new products.

.....

.....

.....

..... **[2]**

© OCR 2025

16 Greenhouse gases, such as methane, keep the Earth and its atmosphere warm. This is called the greenhouse effect.

(a) **Fig. 16.1** shows the greenhouse effect.

Fig. 16.1

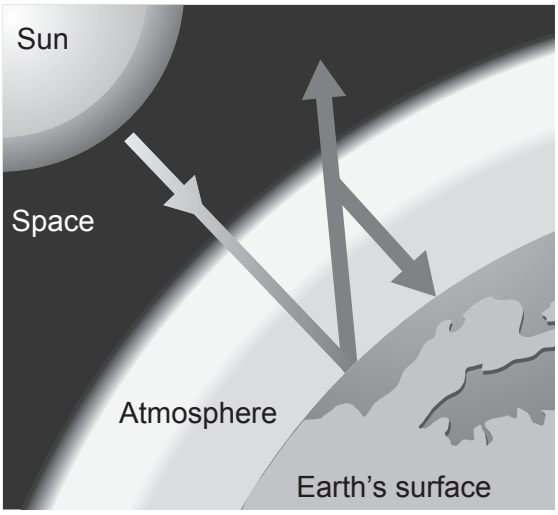

- Solar radiation from the Sun reaches the Earth's surface.
- Most of the radiation is absorbed by the Earth's surface.
- The remainder is emitted by the Earth's surface as infrared radiation.

Describe how greenhouse gases help keep the Earth and its atmosphere warm.

.....

.....

.....

..... **[2]**

© OCR 2025

(b) **Fig. 16.2** shows how the Earth's temperature has changed since 1880 (compared to the average temperature from 1951–1980).

Fig. 16.2

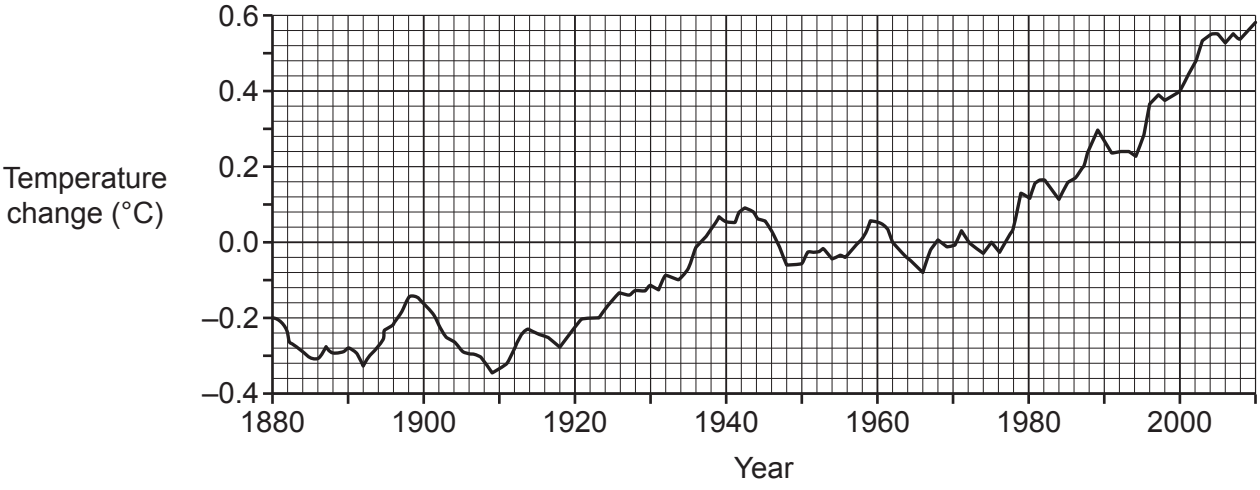

The level of methane in the air has been steadily increasing since 1880.

Describe how **Fig. 16.2** supports the idea that increased levels of methane contribute to global warming.

Include an argument that opposes this idea.

.....

.....

.....

.....

..... **[2]**

END OF QUESTION PAPER

© OCR 2025

EXTRA ANSWER SPACE

If you need extra space use these lined pages. You must write the question numbers clearly in the margin.

© OCR 2025

© OCR 2025

OCR
Oxford Cambridge and RSA

Copyright Information

OCR is committed to seeking permission to reproduce all third-party content that it uses in its assessment materials. OCR has attempted to identify and contact all copyright holders whose work is used in this paper. To avoid the issue of disclosure of answer-related information to candidates, all copyright acknowledgements are reproduced in the OCR Copyright Acknowledgements Booklet. This is produced for each series of examinations and is freely available to download from our public website (www.ocr.org.uk) after the live examination series.

If OCR has unwittingly failed to correctly acknowledge or clear any third-party content in this assessment material, OCR will be happy to correct its mistake at the earliest possible opportunity.

For queries or further information please contact The OCR Copyright Team, The Triangle Building, Shaftesbury Road, Cambridge CB2 8EA.

OCR is part of Cambridge University Press & Assessment, which is itself a department of the University of Cambridge.

© OCR 2025